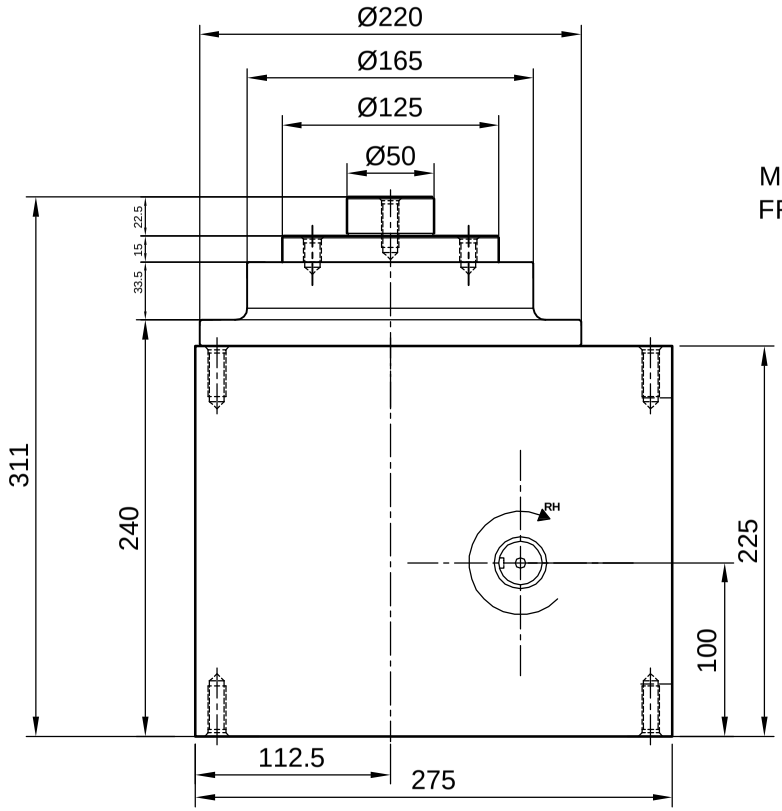

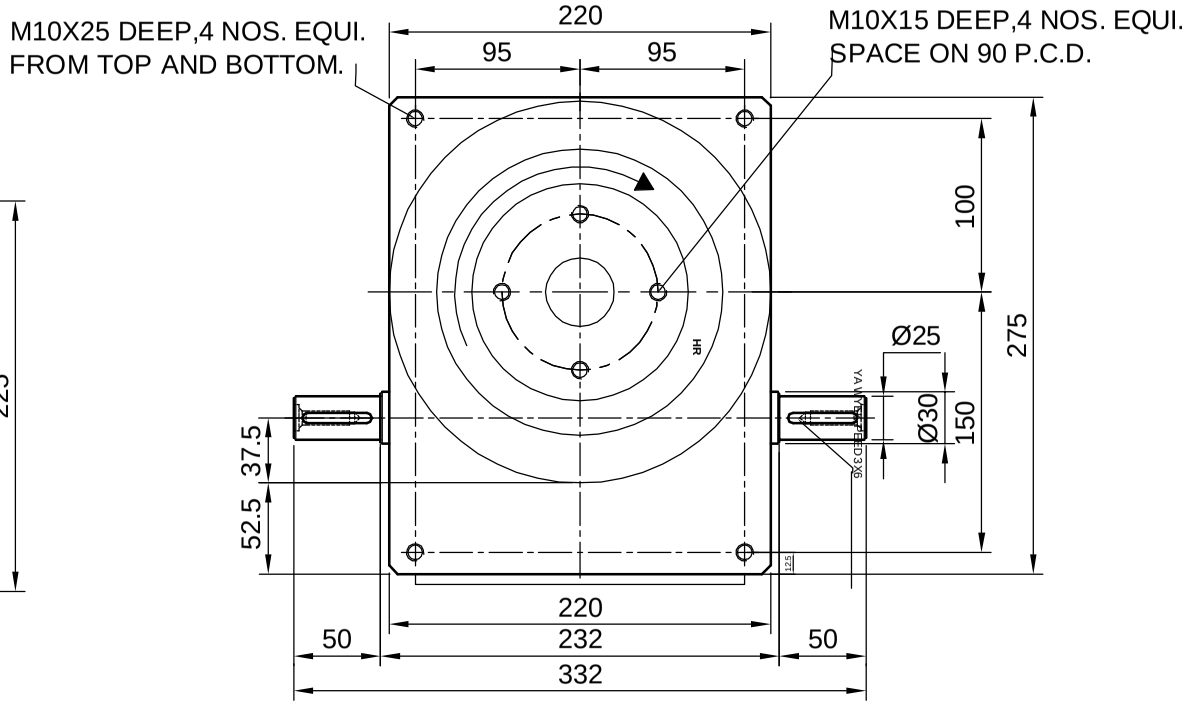

SD-150 = 4,6,8 INDEXING
NOTE:- OIL INLET, OUTLET AND OIL INDICATOR AS PER MOUNTING POSITION

REMOVE ALL SHARP CORNERS 1X45°

SD-150.

NOTE :-

DRAWN BY	AJAY.H.P.	ALL DIMENSIONS ARE IN M M		LOCATION:- SD-150 ASSY. DWG..
DESGN BY		DRG.NO.:-		
DATE	22-08-16	DRG NAME:-		
SCALE	1:1			
		METAL	QTY	PART NO
		EN-24	1 NO.	

CAMFIELD ENGINEERS

21,Shreepal Indl. Est. Chincholi. Pavan Baug.
Malad (West). Mumbai :- 400064