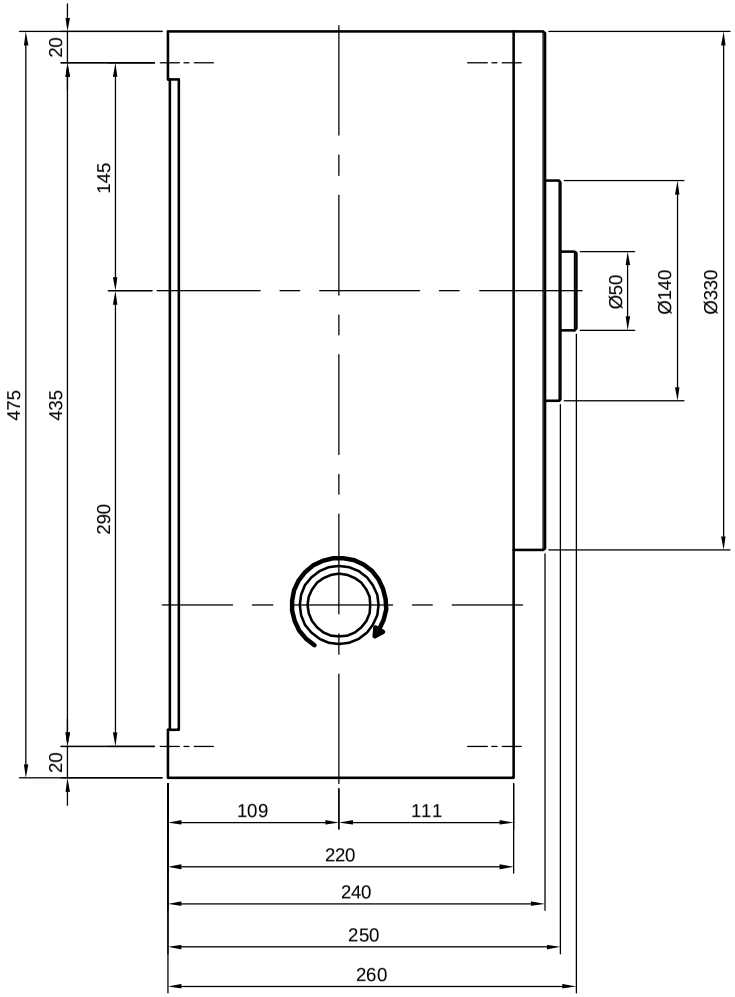

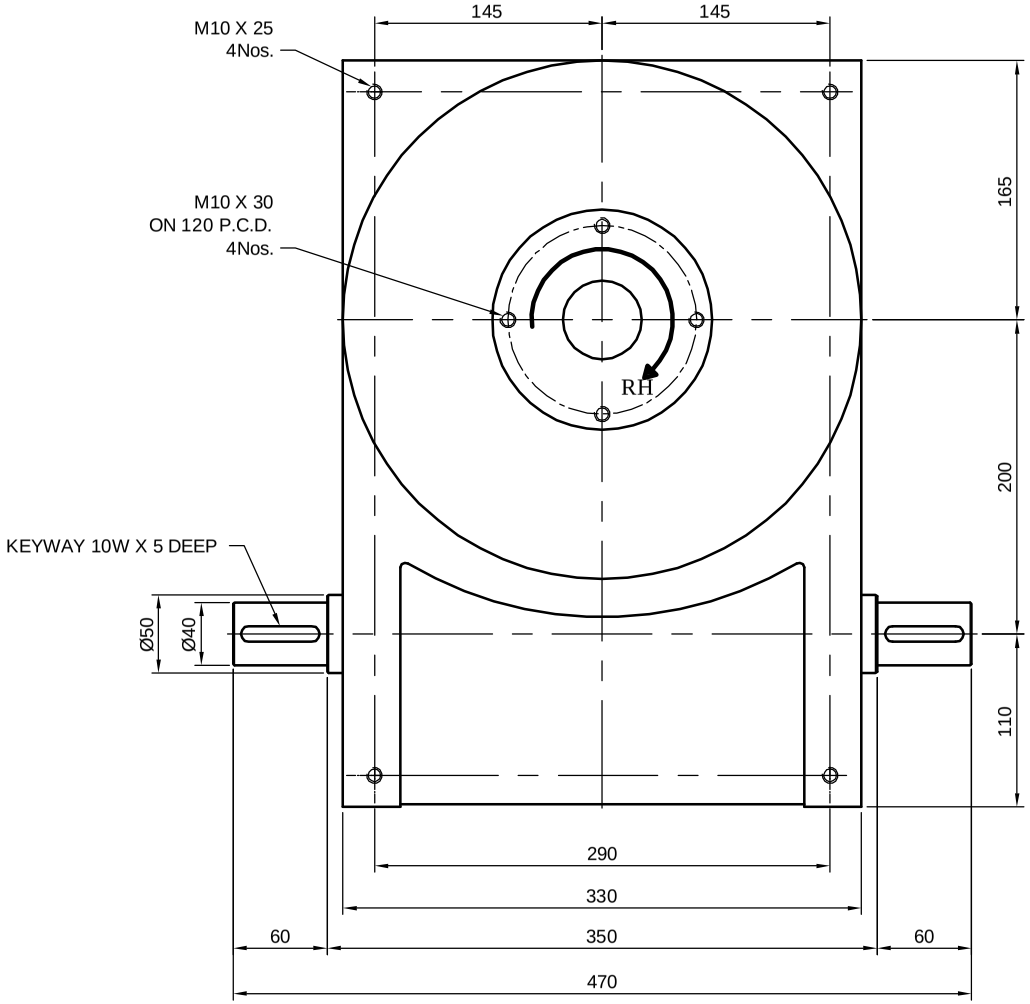

NOTE :- FD - 200 FLAT = 8,12,16,18,20,24 INDEXING

INDEXING TIME AS PER REQUEST: RANGE - 90° - 300°

FD - 200 FLAT RH-CAM INDEXING SYSTEM

NOTE :-

DRAWN BY	PANKAJ	ALL DIMENSIONS ARE IN MM		LOCATION:- ---
DESIGN BY	---	DRG.NO.:-		
DATE	26.07.12	DRG NAME:- FD - 200 FLAT CAM INDEXING SYSTEM		
SCALE	1:1			
		MATERIAL	QTY	PART NO
		---	---	

CAMFIELD ENGINEERS

21, Shreepal Industrial Estate, Pavan Baug,
Chincholi Phatak, Malad (West). Mumbai :- 400064